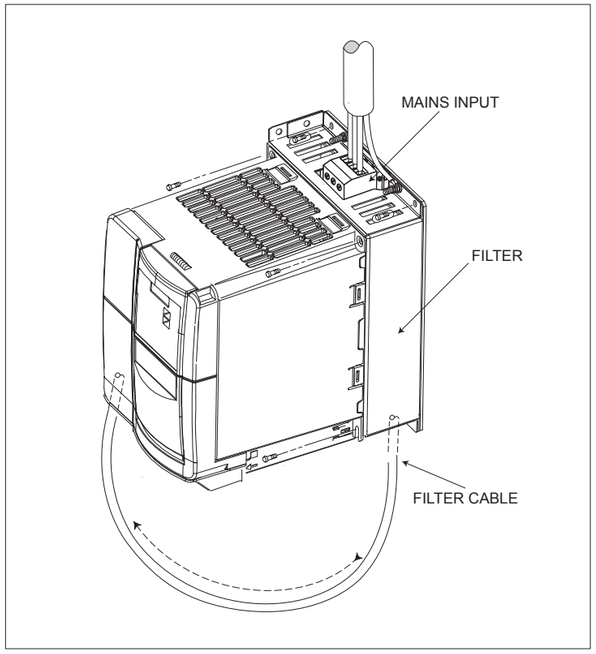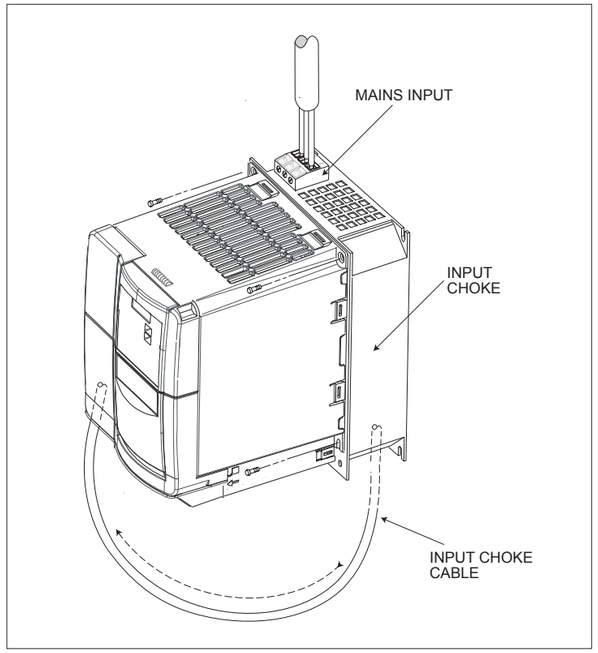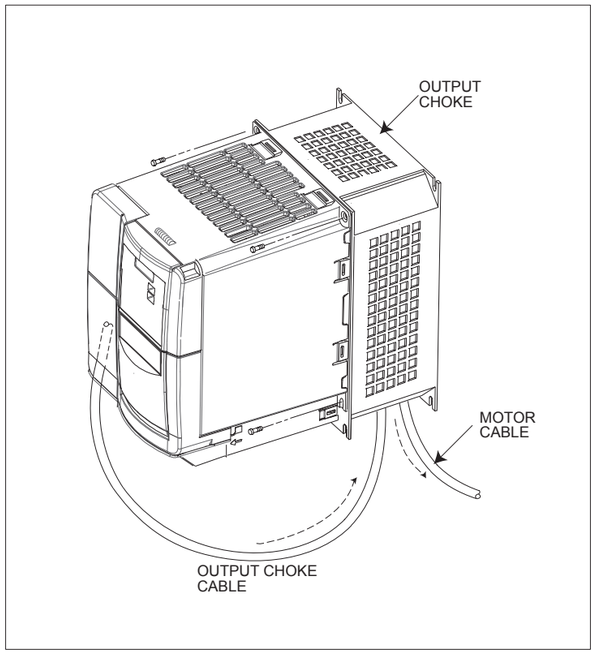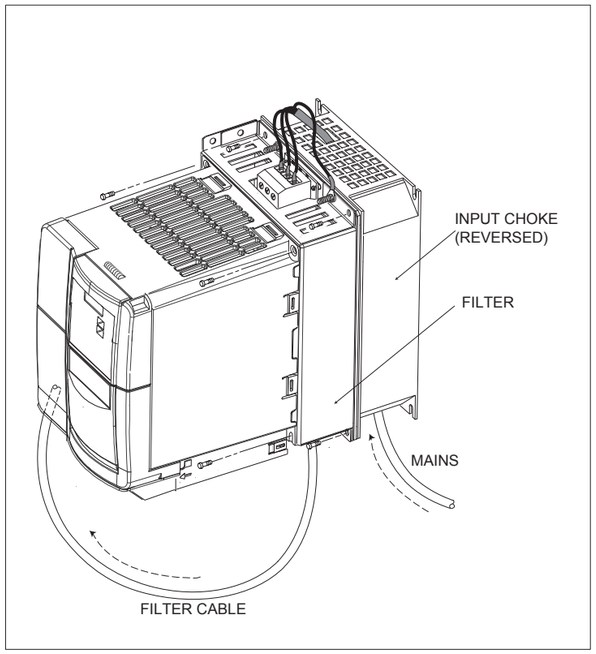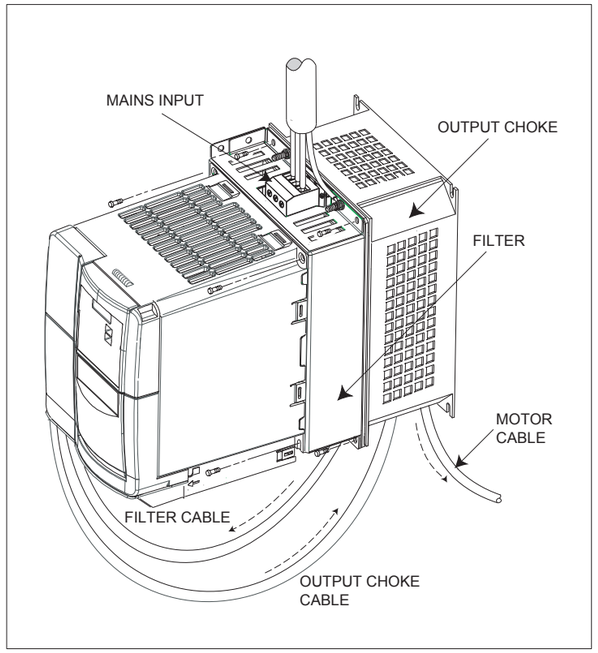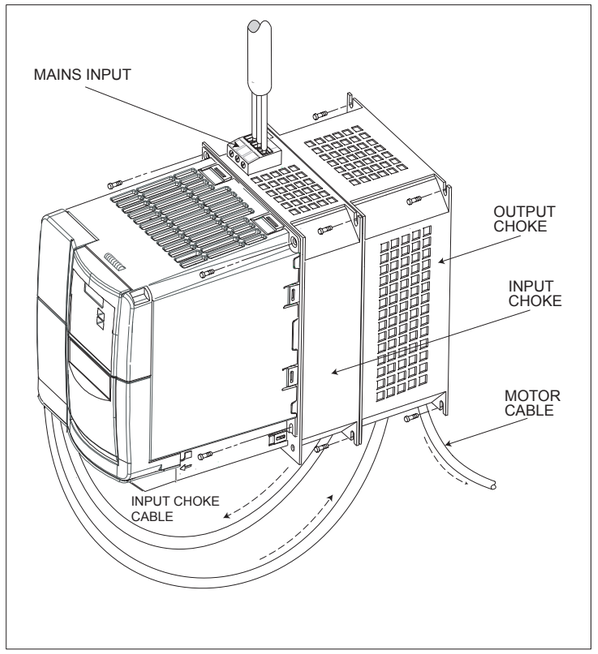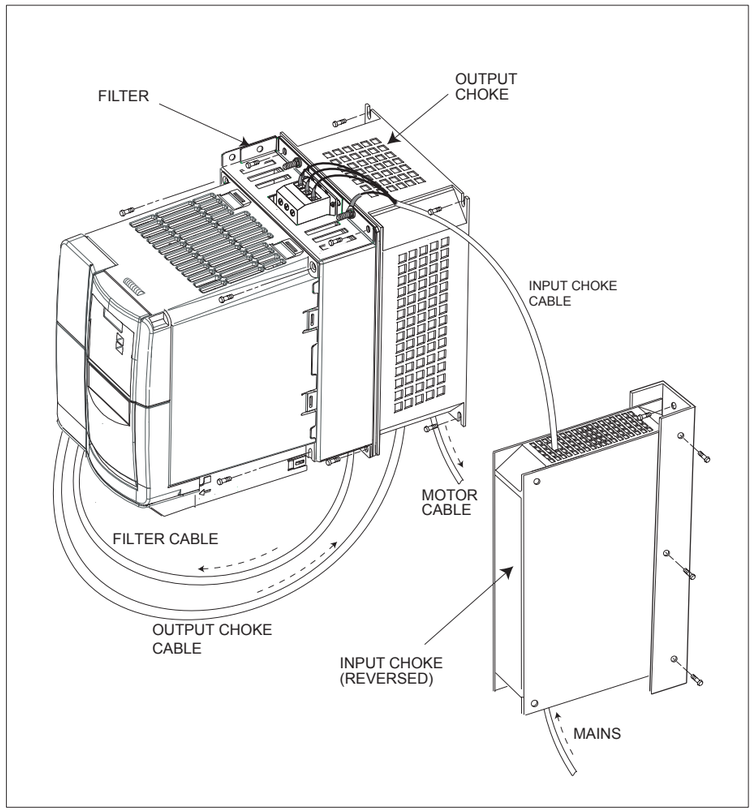OPTIONS COMBINATIONS EXAMPLES